KEY AUTOMATION

Instructions and warnings for installation and use

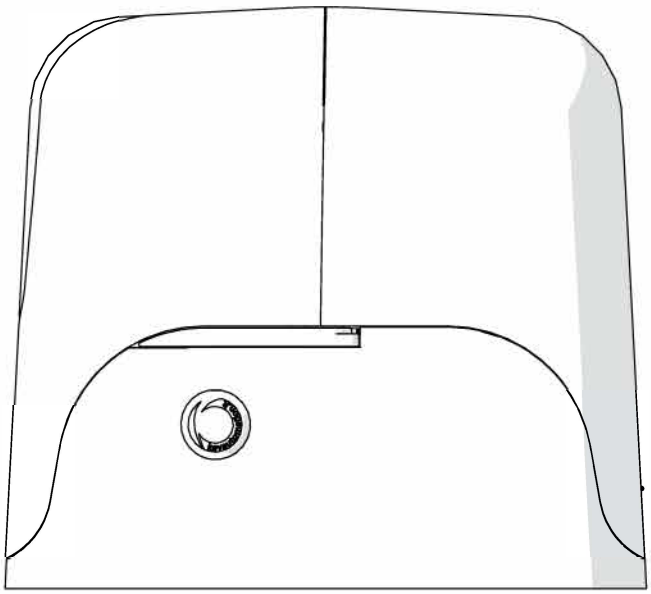

SUN

Gear-motor for sliding gates

Management
System
ISO 9001

www.tuv.com
ID 9105043769

INDEX

1 - SAFETY WARNINGS

⚠ ATTENTION !

ORIGINAL INSTRUCTIONS - important safety instructions. Follow the instructions since incorrect installation can lead to severe inquiry! Save these instructions.
Read the instructions carefully before proceeding with installation.

The design and manufacture of the devices making up the product and the information in this manual are compliant with current safety standards. However, incorrect installation or programming may cause serious injury to those working on or using the system. Compliance with the instructions provided here when installing the product is therefore extremely important.

If in any doubt regarding installation, do not proceed and contact the Key Automation Technical Service for clarifications.

Under European legislation, an automatic door or gate system must comply with the standards envisaged in the Directive 2006/42/EC (Machinery Directive) and in particular standards EN 12445; EN 12453; EN 12635 and EN 13241-1, which enable declaration of presumed conformity of the automation system.

Therefore, final connection of the automation system to the electrical mains, system testing, commissioning and routine maintenance must be performed by skilled, qualified personnel, in observance of the instructions in the “Testing and commissioning the automation system” section.
The aforesaid personnel are also responsible for the tests required to verify the solutions adopted according to the risks present, and for ensuring observance of all legal provisions, standards and regulations, with particular reference to all requirements of the EN 12445 standard which establishes the test methods for testing door and gate automation systems.

⚠ ATTENTION !

Before starting installation, perform the following checks and assessments:

ensure that every device used to set up the automation system is suited to the intended system overall. For this purpose, pay special attention to the data provided in the “Technical specifications” section. Do not proceed with installation if any one of these devices is not suitable for its intended purpose;

check that the devices purchased are sufficient to guarantee system safety and functionality;

perform a risk assessment, including a list of the essential safety requirements as envisaged in Annex I of the Machinery Directive, specifying the solutions adopted. The risk assessment is one of the documents included in the automation system’s technical file. This must be compiled by a professional installer.

Considering the risk situations that may arise during installation phases and use of the product, the automation system must be installed in compliance with the following safety precautions:

never make modifications to any part of the automation system other than those specified in this manual. Operations of this type can only lead to malfunctions. The manufacturer declines all liability for damage caused by unauthorised modifications to products;

if the power cable is damaged, it must be replaced by the manufacturer or its after-sales service, or in all cases by a person with similar qualifications, to prevent all risks;

do not allow parts of the automation system to be immersed in water or other liquids. During installation ensure that no liquids are able to enter the various devices;

should this occur, disconnect the power supply immediately and contact a Key Automation Service Centre. Use of the automation system in these conditions may cause hazards;

never place automation system components near to sources of heat or expose them to naked lights. This may damage system components and cause malfunctions, fire or hazards;

⚠ ATTENTION !

The drive shall be disconnected from its power source during cleaning, maintenance and when replacing parts. If the disconnect device is not in a visible location, affix a notice stating: “MAINTENANCE IN PROGRESS”:

connect all devices to an electric power line equipped with an earthing system;

the product cannot be considered to provide effective protection against intrusion. If effective protection is required, the automation system must be combined with other devices;

the product may not be used until the automation system “commissioning” procedure has been performed as specified in the “Automation system testing and commissioning” section;

the system power supply line must include a circuit breaker device with a contact gap allowing complete disconnection in the conditions specified by class III overvoltage;

use unions with IP55 or higher protection when connecting hoses, pipes or cable glands;

the electrical system upstream of the automation system must comply with the relevant regulations and be constructed to good workmanship standards;

this appliance can be used by children aged from 8 years and above and persons with reduced physical, sensory or mental capabilities or lack of experience and knowledge if they have been given supervision or instruction concerning use of the appliance in a safe way and understand the hazards involved;

before starting the automation system, ensure that there is no-one in the immediate vicinity;

before proceeding with any cleaning or maintenance work on the automation system, disconnect it from the electrical mains;

special care must be taken to avoid crushing between the part operated by the automation system and any fixed parts around it;
children must be supervised to ensure that they do not play with the equipment.

that the drive cannot be used with a driven part incorporating a wicket door unless the drive can only be operated with the wicket door in the safe position;

⚠ ATTENTION !

Frequently examine the installation for imbalance where applicable and signs of wear or damage to cables, springs and mounting.
Do not use if repair or adjustment is necessary.

⚠ ATTENTION !

The automation system component packaging material must be disposed of in full observance of current local waste disposal legislation.
KEY AUTOMATION reserves the right to amend these instructions if necessary; they and/or any more recent versions are available at www.keyautomation.it

2 - INTRODUCING THE PRODUCT

2.1 - Description of the product

The gear motor SUN is intended to be installed within systems for the automation of sliding gates. The SUN gear motors have been designed to automate sliding gates within the weight limits indicated in the technical specifications table.
The use of gear motors for applications which differ from those indicated above is prohibited.

2.2 - Model and technical characteristics

Code	Description
SUN4024	24 Vdc gear motor with mechanical limit switches, gate maximum weight 400 kg
SUN4224	24 Vdc gear motor with mechanical limit switches, gate maximum weight 400 Kg
SUN7024/SUN7024M*	24 Vdc gear motor with mechanical limit switches, gate maximum weight 700 Kg
SUN7224	24 Vdc gear motor with mechanical limit switches, gate maximum weight 700 Kg
SUN11024/SUN11024M*	24 Vdc gear motor with mechanical limit switches, gate maximum weight 1100 Kg
SUN52	230 Vac gear motor with mechanical limit switches, gate maximum weight 500 Kg
SUN82	230 Vac gear motor with mechanical limit switches, gate maximum weight 800 Kg
SUN122	230 Vac gear motor with mechanical limit switches, gate maximum weight 1200 Kg
SUN5024F	24 Vac gear motor with magnetic limit switches, gate maximum weight 500 Kg

* magnetic limit switches

TECHNICAL DATA

MODELS		SUN4024	SUN4224	SUN7024/ SUN7024M	SUN7224	SUN11024/ SUN11024M	SUN52	SUN82	SUN122	SUN5024F
TECHNICAL SPEC.										
Speed	cm/s	21	21	25	25	20	16	16	16	40
Torque	Nm	12	12	26	26	38	16	23	35	23
Working cycle	%	50	50	80	80	80	30	30	30	80
Control unit		14A	CT10224	14A	CT10224	14A	CT102B	CT102B	CT102B	14A
Power supply	Vac (Vdc)	230(24)	230(24)	230(24)	230(24)	230(24)	230	230	230	230(24)
Absorption	A	1,1	1,1	1,5	1,5	1,3	1,3	1,9	2,6	1,5
Engine power	W	250	250	345	345	300	300	450	600	345
Capacitor	µF	-	-	-	-	-	12,5	16	20	-
Thermoprotection	°C	-	-	-	-	-	150	150	150	-
Integrated lights		SI	-	SI	-	SI	-	-	-	SI
Degree of protection	IP	44	44	44	44	44	44	44	44	44
Dimensions (L-P-H)	mm	330-210-300	330-210-300	330-210-300	330-210-300	330-210-300	330-210-300	330-210-300	330-210-300	330-210-300
Weight	Kg	12	12	12,5	12,5	13	15,5	16	16,5	12,5
Operating temperat.	°C	-20+55	-20+55	-20+55	-20+55	-20+55	-20+55	-20+55	-20+55	-20+55
Leaves max weight	Kg	400	400	700	700	1100	500	800	1200	500
Sound emission level	dB(A)	≤ 70	≤ 70	≤ 70	≤ 70	≤ 70	≤ 70	≤ 70	≤ 70	≤ 70

3 - PRELIMINARY CHECKS

Before installing this product, verify and check the following steps:

- Check that the gate or door are suitable for automation

- The weight and size of the gate or door must be within the maximum permissible operating limits

- Check the presence and strength of the security mechanical stops of the gate or door

- Check that the mounting area of the product is not subject to flooding

- Conditions of high acidity or salinity or proximity to heat sources could cause malfunction of the product

- Extreme weather conditions (for example the presence of snow, ice, high temperature range, high temperatures) may increase the friction and therefore the force required for the handling and initial starting point may be higher than under normal conditions.

- Check that the manual operation of gate or door is smooth and friction-free and there is no risk of derailment of the same

- Check that the gate or door are in equilibrium and stationary if left in any position

- Check that the power line to supply the product is equipped with proper grounding safety and protected by a magnetothermal and differential security device
- Provide the power system with a disconnecting device with a gap of contacts enabling full disconnection under the conditions dictated by the overvoltage category III.

- Ensure that all materials used for the installation comply with current regulations

4 - PRODUCT INSTALLATION

4.1 - Installation

⚠ ATTENTION !

The installer shall check that the temperature range marked on the drive is suitable for the location.

Before proceeding with the installation, check the integrity of the product and that all components are present in the package.
Check that the gate weight respects the limit of the table (paragraph 2.2) and dimensions of the gear motor are met (Fig. 1).

Fig.2 shows a typical installation:

Gear motor (1)
Photocells (2)
Columns for photocells (3)
Flashing light with antenna (4)
Key switch or digital keypad (5)
Pressure-sensitive edge (6)

⚠ ATTENTION !

The automation system must be equipped with a pressure-sensitive edge protecting all possible crushing points (hands, feet, etc.) in accordance with the requirements of the EN 13241-1 standard.

4.2 - Installing the foundation box

Verify the orientation and the overall dimensions of the base plate, fix to ground the base-plate through 4 sturdy screw-anchors or drown it into the concrete (Fig.3).
Provide one or more corrugated duct tubes for routing the electric cables.

⚠ ATTENTION !

The exact dimensions of the rack must be known to allow precise calculation of the fixing plate position.

4.3 - Motor unlock

To release the gearmotor remove the cap on the side (Fig.4.1) and turn the pin with the release key or the Sub remote control (Fig.4.2). Then turn the lever (Fig.5).

⚠ ATTENTION !

With motors with integrated night lights (Night Light System) make sure not to rip off the cable that connects the leds on the cover with the control board. If necessary, disconnect the connector shown in figure 7.

4.4 - Fixing the plate

Open the cover by applying leverage with a screwdriver on the recesses at the sides (Fig.6).
Place the gearmotor on the plate and fix the 4 nuts (Fig.8a). If the permitted adjustment of the rack is not sufficient, before tightening the nuts the height of the gearmotor can be corrected using the four regulator stud bolts (Fig.8b).
After the adjustment, it is important to fully tighten the nuts, making sure that the gearmotor is firmly anchored to the ground throughout the gate's travel stroke.
The screws should be tightened again after the gearmotor has been operated a few times.
Replace the cover so that the light is pointed in the required direction (Fig.9), such as towards the passage.

4.5 - Rack assembling

Open entirely the gate.
Put a rack element on the pinion gear and fasten it to the gate with screw and spacing bars (Fig.10).
Move the gate manually bringing the pinion gear into line with the last spacing bar.
Fasten the rack element for good.

For a correct positioning of the other elements and to assure their straightness, it is necessary to employ a rack element using it as support and reference. It is besides necessary to assure an aperture of 2 mm between rack and pinion gear, so that the gate weight doesn't rest on the gearmotor pinion gear.

4.6 - Limit switch fixing

⚠ ATTENTION !

The gate has to be equipped with stop locks at the opening and closing, which prevent the gate derailment.

The stop lock position must assure that the limit switch brackets don't collide with the pinion gear. (Fig.11)

Haul the gate manually at the opening leaving, depending on the gate weight, a crack from 30 to 50 mm between the main gate and mechanical stop.
Fasten the limit switch bracket through the dowels so that the limit switch is pressed (Fig.11).

Follow the instructions of the control panel and close the cover.

5 - TESTING AND COMMISSIONING THE AUTOMATION SYSTEM

The testing of the system must be performed by qualified technicians who must perform the tests required by relevant legislation related to risks, ensuring compliance with the provisions of the regulations, in particular the EN12445 standard, which specifies the testing methods for the automation of doors and gates.

5.1 - Testing

All system components must be tested following the procedures outlined in the respective instruction manuals.

Check that they meet the guidelines in Chapter 1 - Safety warnings Check that the gate or door can move freely once the automation is unlocked, and that they are in equilibrium and stationary if left in any position.

Check the correct operation of all connected devices (photocells, sensitive edges, emergency buttons, etc.), testing the opening, closing and stopping of the gate or door via the connected control devices (transmitters, buttons, switches).

Carry out measurements of the impact force, as prescribed by standard EN12445 adjusting the functions of speed, motor force and deceleration of the unit if the measurements do not give the desired results until you find the right setting.

5.2 - Commissioning

Following the successful testing of all (and not just some) devices in the system you can proceed with the commissioning.

You must prepare, and keep for 10 years, the technical file of the system with the wiring diagram, drawing or photo of the system, risks analysis and solutions adopted, manufacturer declaration of conformity of all devices connected, instruction manual of each device and maintenance schedule of the system.

Fix on the gate or door a plaque indicating the automation data, the name of the person responsible for the commissioning, the serial number and year of construction, the CE mark.

Attach a plaque indicating the steps required to manually unlock the system.

Implement and deliver to the end user the declaration of conformity, the instructions and warnings for use for the end user and the maintenance schedule of the system.

Make sure the user understands proper automatic, manual and emergency operation of the automation.

Inform the end user in writing of the dangers and risks still present.

6 - IMAGES

Fig. 1
EN - Dimensions

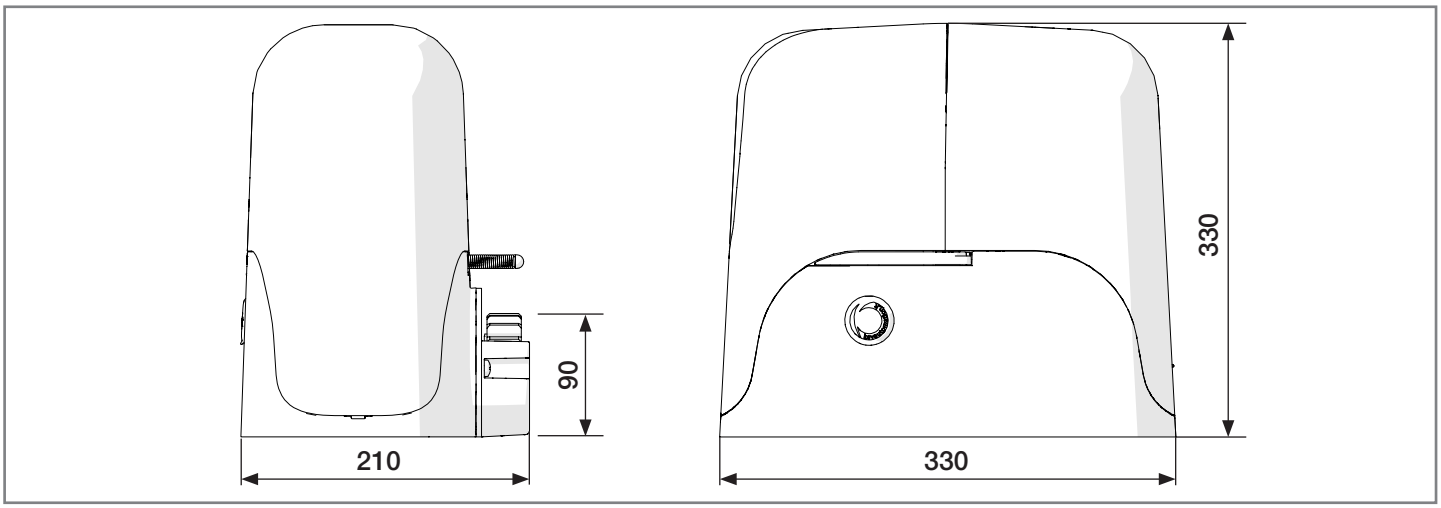

Fig. 2
EN - Typical Installation

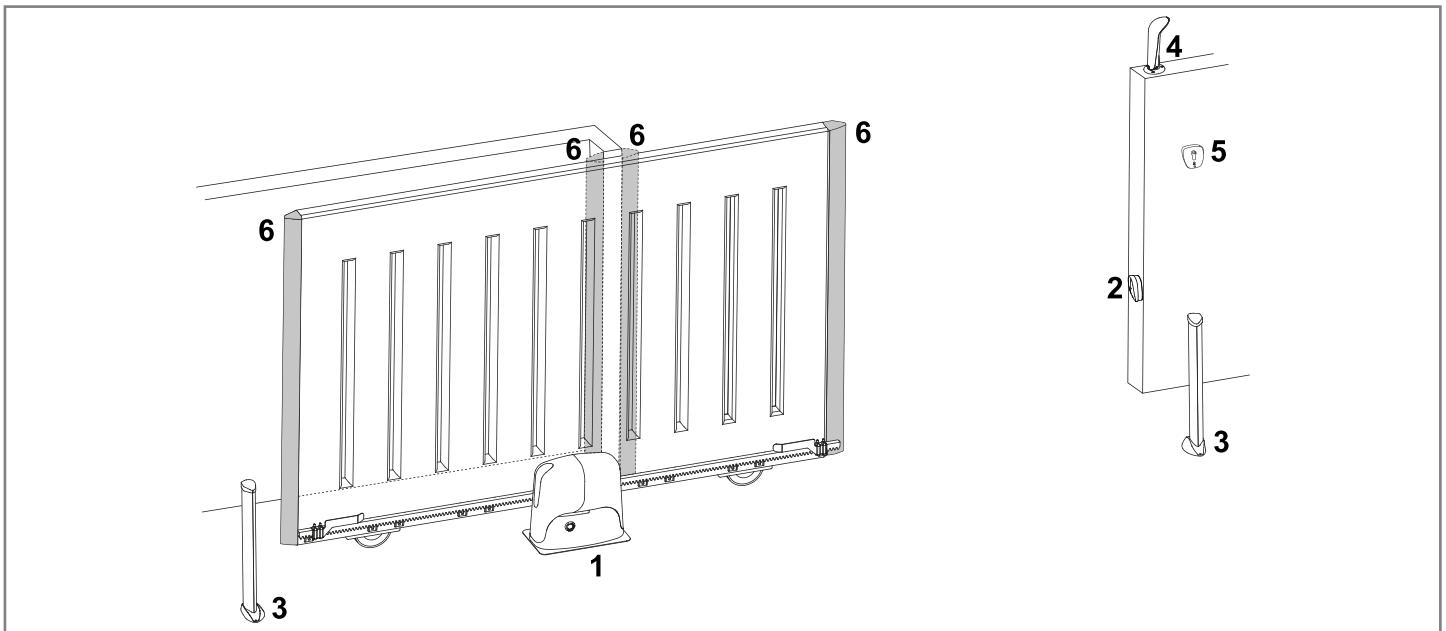

SUN5024F

CAUTION: take great care in consideration of the high speed of the gate, in order to ensure a high level of safety as indicated in the figure.
Control unit 14A FAST enables separate programming of the gearmotor opening and closing speed. Control unit 14A FAST inside the motor is dedicated exclusively to the management of the model SUN5024F and cannot be used for the control of other automations.

Fig. 3
EN - Foundation box

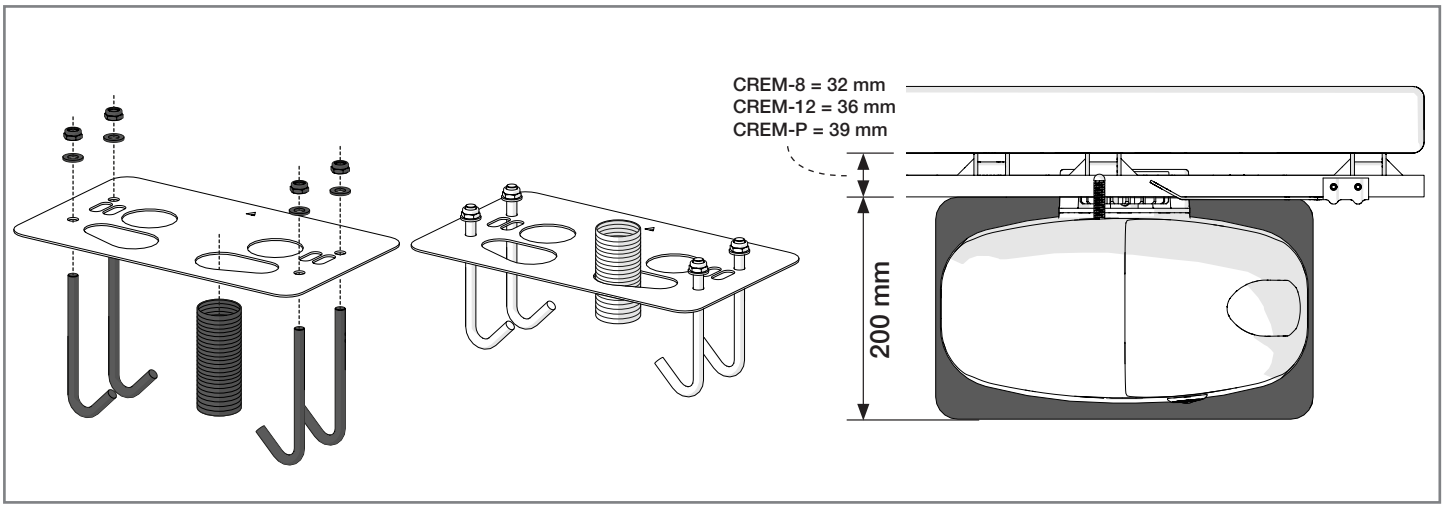

Fig. 4 **EN - Gearmotor release**

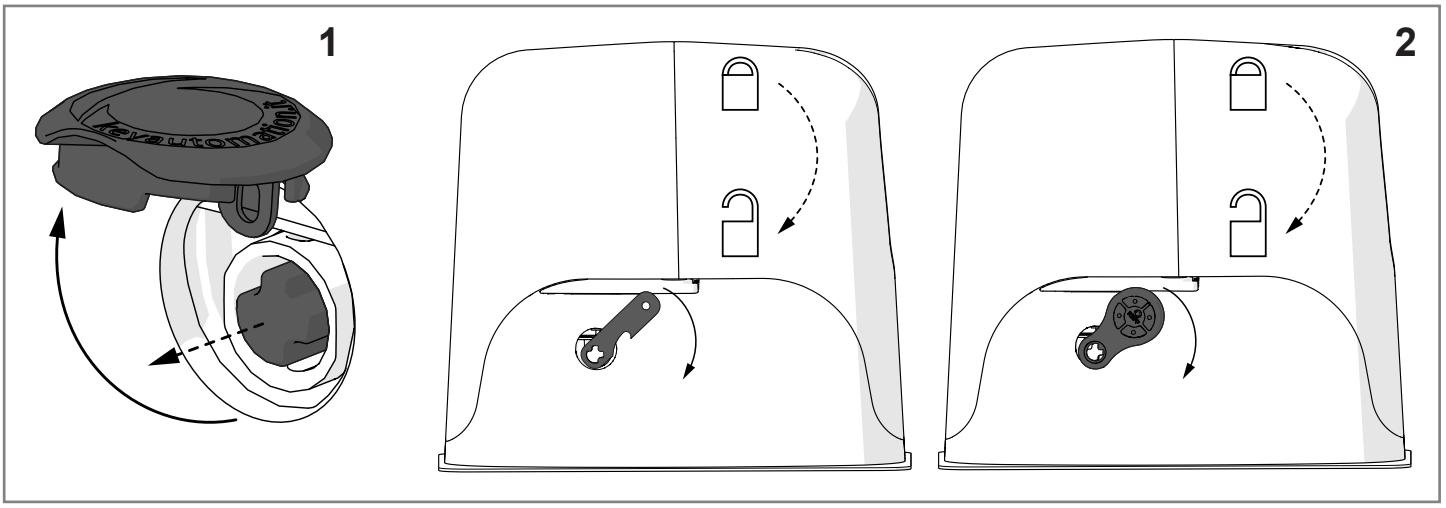

Fig. 5
EN - Gearmotor release

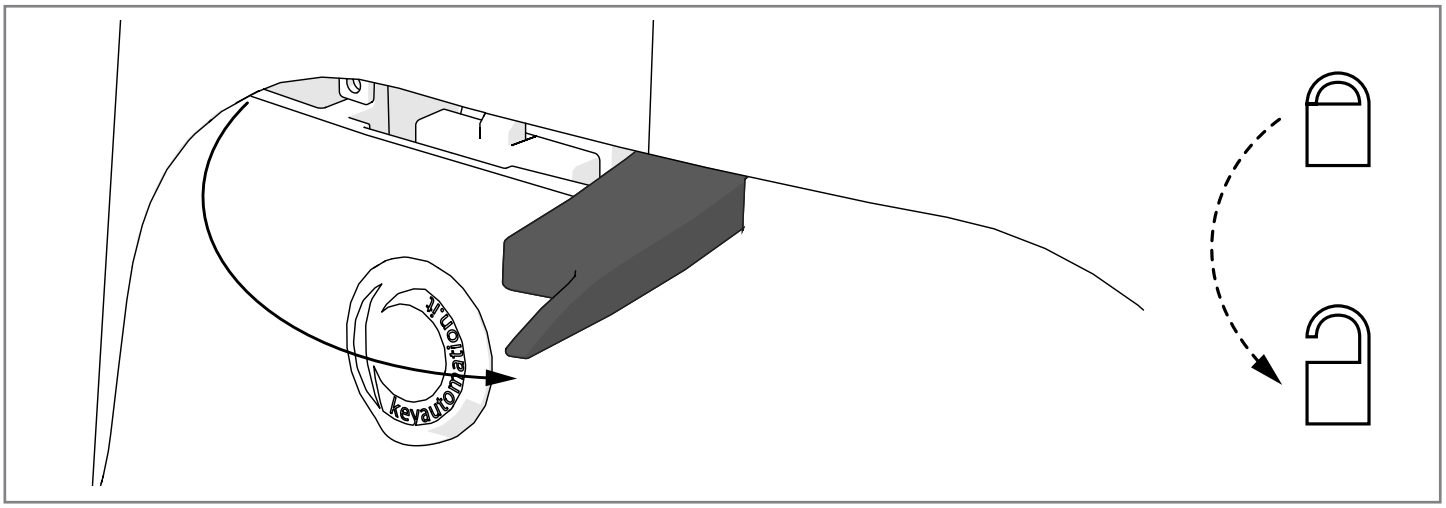

Fig. 6
EN - Opening the cover

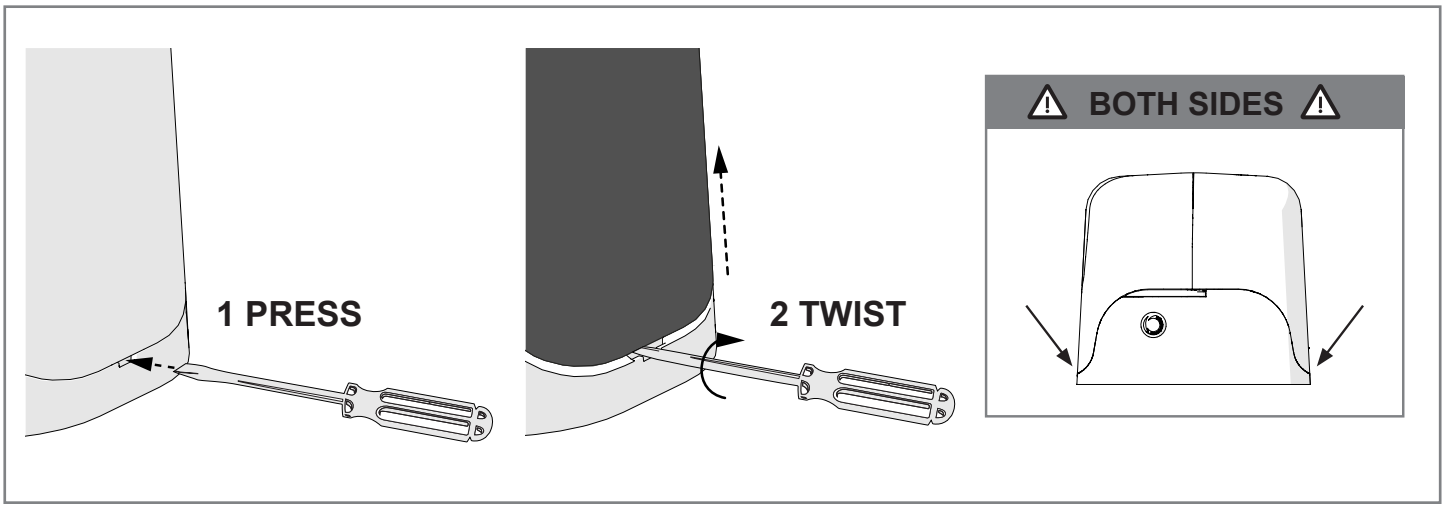

Fig. 7
EN - Night Light System

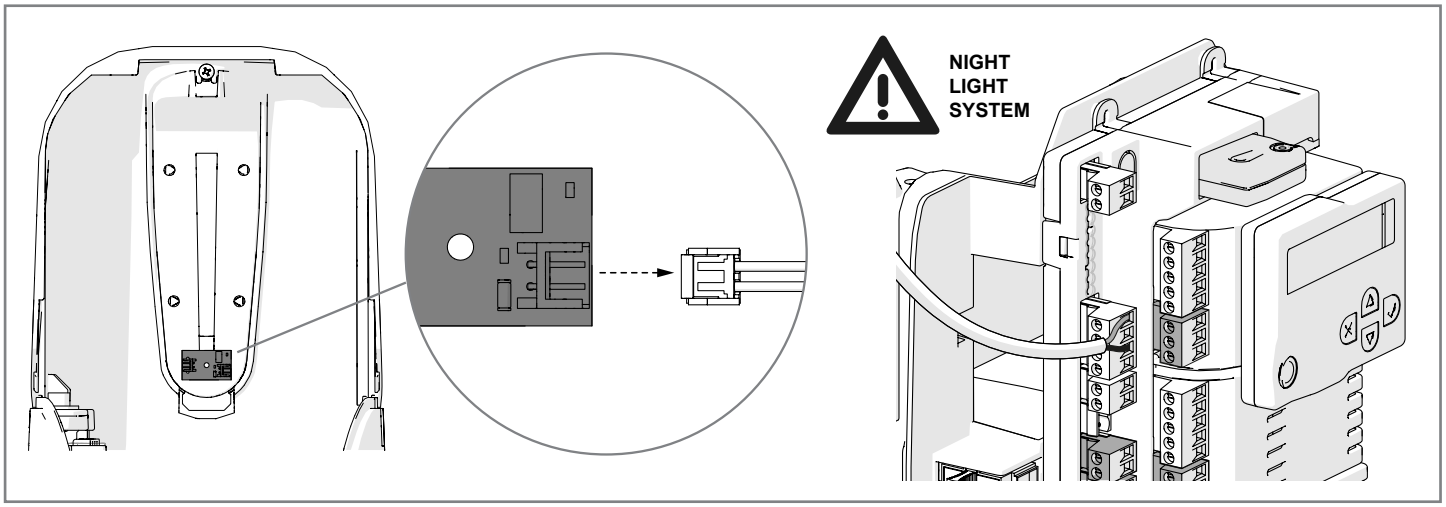

Fig. 8
EN - Installing the foundation box

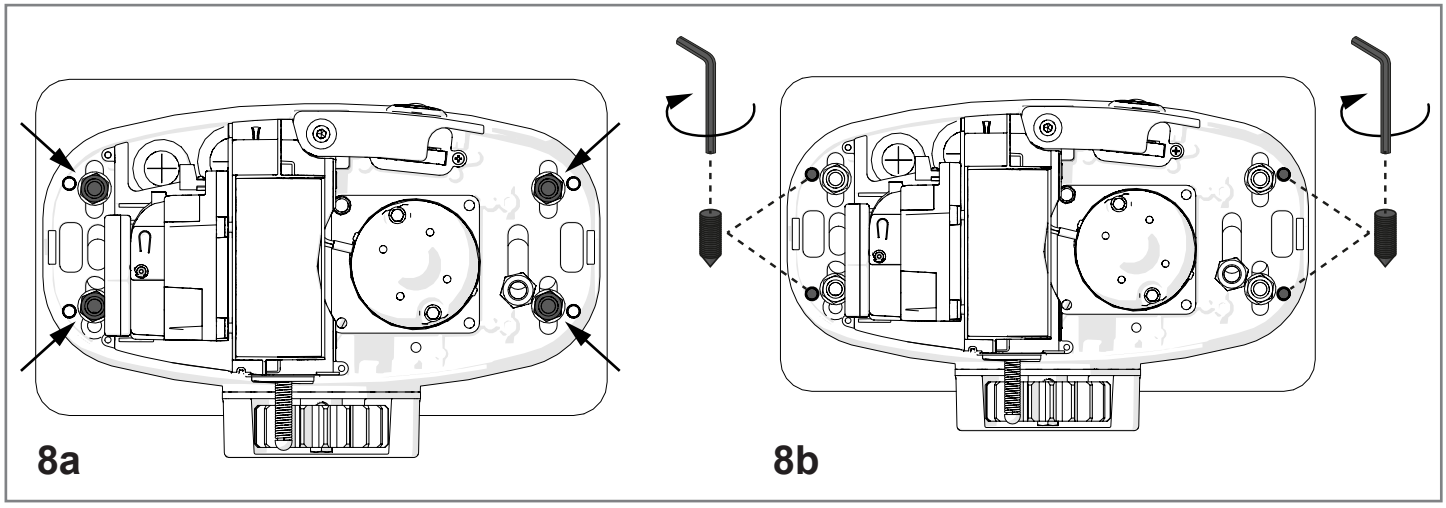

Fig. 9
EN - Closing the cover

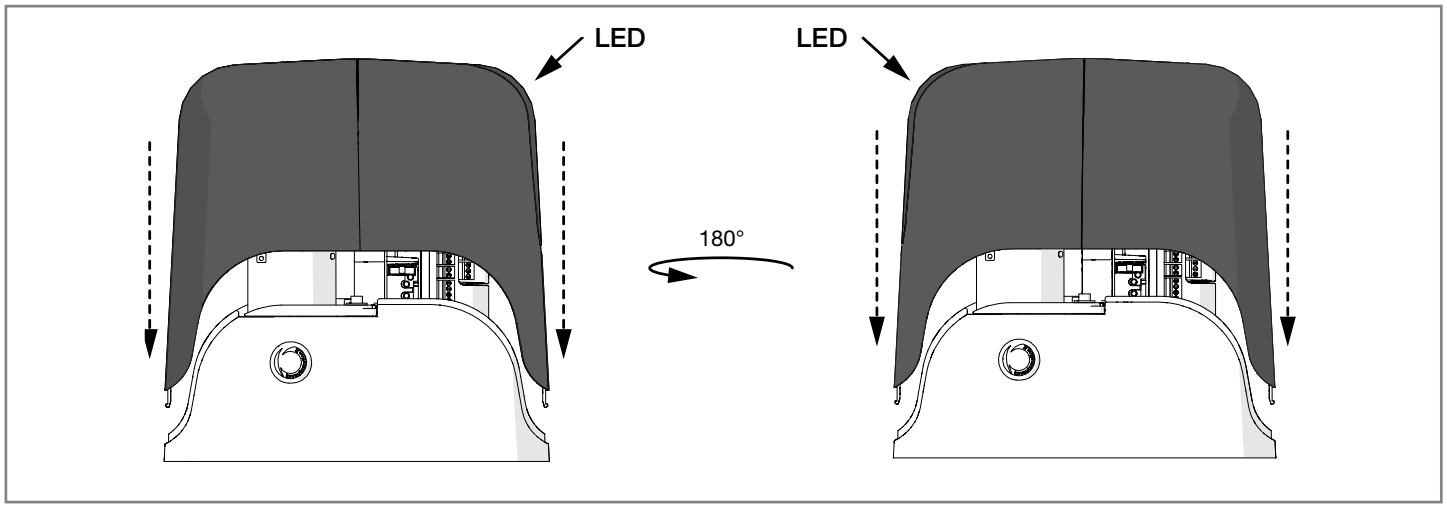

Fig. 10
EN - Rack assembling

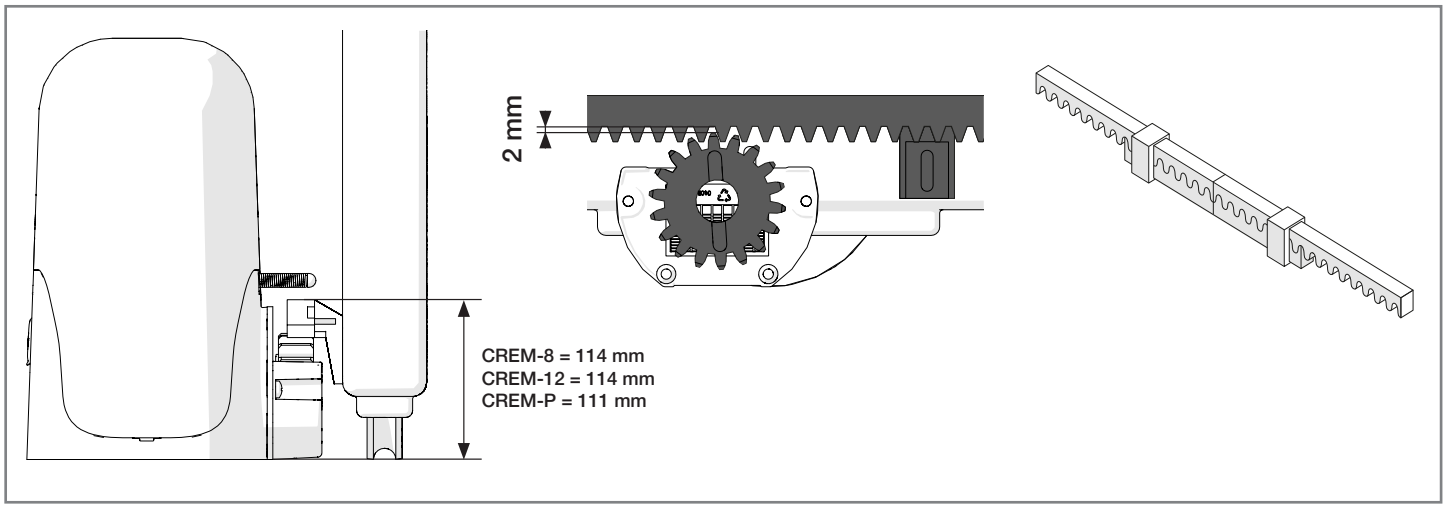

Fig. 11
EN - Limit switch fixing

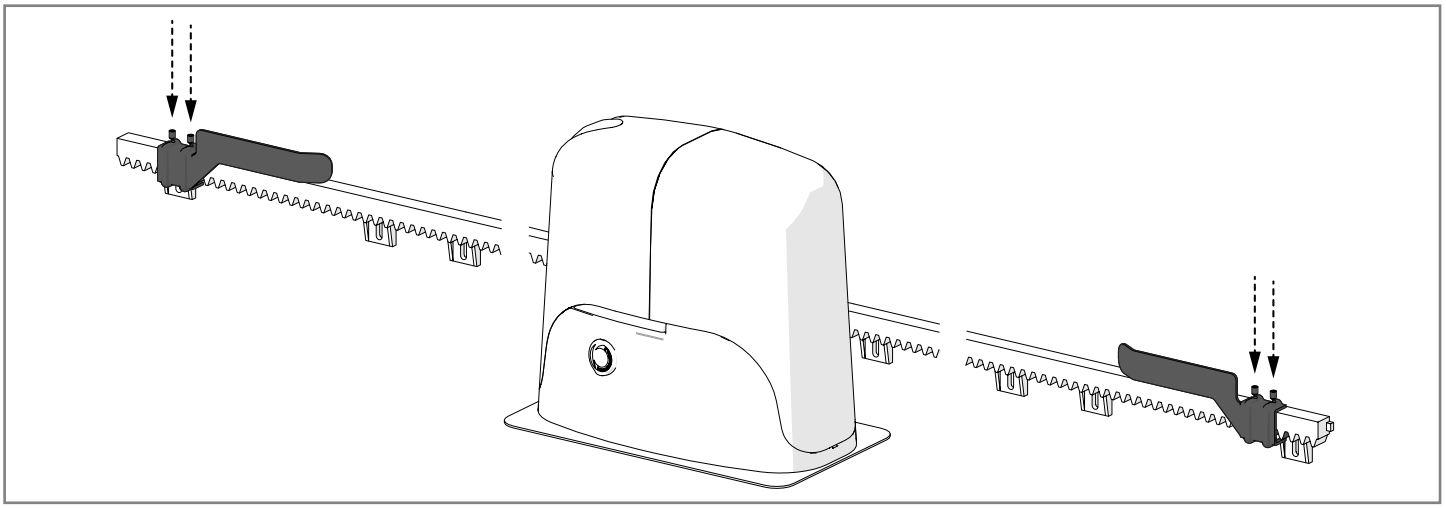

DECLARATION OF INCORPORATION OF PARTLY COMPLETED MACHINERY

The undersigned Nicola Michelin, General Manager of the company

Key Automation srl, Via Meucci, 23 - 30027 San Donà di Piave (VE) - ITALIA

declares that the product type:

SUN
Electromechanical irreversible gear motor for sliding gates from 400kg to 1200kg

Models:

SUN52, SUN82, SUN122
SUN4024, SUN4024M, SUN4224, SUN5024F, SUN7024, SUN7024M, SUN7224, SUN11024, SUN11024M

Is in conformity with the following community (EC) regulations:

Direttiva macchine / *Machinery Directive* 2006/42/EC
Direttiva compatibilità elettromagnetica / *EMC Directive* 2014/30/EU
Direttiva bassa tensione / *Low voltage Directive* 2014/35/EU
Direttiva radiofrequenza / *RED Directive* 2014/53/EU
Direttiva RoHS / *RoHS Directive* 2011/65/UE

In accordance with the following harmonized standards regulations:

ETSI EN 301489-3:2013, ETSI EN 301489-1:2011
EN 60950-1:2006 + A11:2009 + A1:2010 + A12:2011 + A2:2013
EN 61000-3-2:2014, EN 61000-3-3:2013
EN 61000-6-2:2005, EN 61000-6-3:2007
EN 60335-1:2012 + A1 + A11; EN 60335-2-103:2015
EN 55014-1:2006 + A1 + A2; EN 55014-2:2015
EN 62233:2008

Declares that the technical documentation is compiled in accordance with the directive 2006/42/EC Annex VII part B and will be transmitted in response to a reasoned request by the national authorities.

He also declares that is not allowed to use the above mentioned product until the machine, in which this product is incorporated, has been identified and declared in conformity with the regulation 2006/42/EC.

San Donà di Piave (VE), 21/02/17

Amministratore Delegato
General Manager
Nicola Michelin

Key Automation S.r.l.
Via Meucci, 23
30027 San Donà di Piave (VE)
P.IVA 03627650264 C.F. 03627650264
info@keyautomation.it

Capitale sociale 154.000,00 i.v.
Reg. Imprese di Venezia 03627650264
REA VE 326953
www.keyautomation.it

NOTE

NOTE

Key Automation S.r.l.
Via Meucci, 23 · 30027 San Donà di Piave (VE)
T. +39 0421 307456 · F. +39 0421 65698
info@keyautomation.it · www.keyautomation.it

Instruction version
580ISSUN REV.08